Dwyer

SERIES APM, MPM & PPM

DUAL LINE CONFIGURABLE PANEL METERS

1/8 DIN Process and Flow / Rate Totalizers

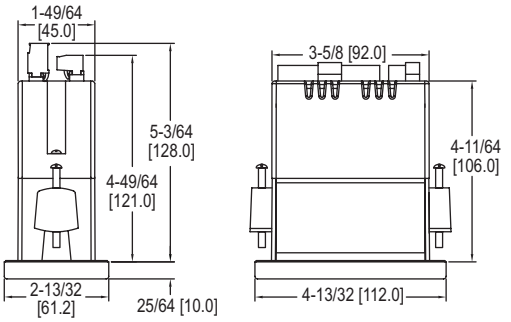

These 1/8 DIN digital panel meters accept signals from various transmitters and flowmeters and displays them on a six-digit, dual line display in engineering units. These meters will also provide power to the field device and include a NEMA 4X front panel. Free, USB based programmnig sofware is resident on the meter. Options include up to four relays and a 4-20 mA output.

The **Series MPM Dual Line Configurable Panel Meter** is a general purpose process meter that is field selectable for a 4-20 mA or 0-10 V input signal. It provides 24 VDC to power the transmitter. The dual line display can display the process variable on the upper line and engineering units on the lower line. Or, in dual scale mode, the process variable can be displayed in one units (like height) on the upper display and another (like volume) on the lower display. The meter also has an automatic Round Horizontal Tank function a well as 32 point linearization.

The **Series APM Dual Line Configurable Panel Meter** and **Series PPM Dual Line Configurable Panel Meter** are flow / rate totalizers for analog or pulse inputs. The most useful feature of these products is their dual line display which allows rate and total to be displayed at the same time. A non-resetable grand total can also be programmed. Total can be reset either from the front panel or by connecting a remote switch to the F4 terminal at the rear of the meter.

The **Series APM** accepts either a 4-20 mA or 0-10 V input signal and provides the 24 VDC to power the flowmeter. Other features of the APM include square root extraction for DP flow, and programmable exponents for open channel flow.

The **Series PPM** accepts a pulse input signal and provides either 5, 10 or 24 VDC to power the flowmeter. Adding the 4-20 mA output option converts the pulse into a signal that can be run long distances to a PLC or other device.

FEATURES/BENEFITS

- NEMA 4X / IP65 front panel
- Powers the transmitter / flowmeter
- Dual line 6 digit display
- Free USB based programming software
- Display rate and total at the same time
- Two or four relays and isolated 4-20 mA output options

APPLICATIONS

- Level monitoring
- Pump control
- Flow rate indication
- Flow totalization
- Open channel flow monitoring
- Process control

SPECIFICATIONS

Input: APM and MPM: 0-20 mA, 4-20 mA, 0-5 V, or ±10 V inputs; PPM: Field selectable: Pulse or square wave 0-5 V, 0-12 V, or 0-24 V @ 30 kHz; TTL; open collector 4.7 k Ω pull-up to 5 V @ 30 kHz; NPN or PNP transistor, switch contract 4.7 k Ω pull-up to 5 V @ 40 Hz. Input impedance: 50 to 100 Ω.
Accuracy: ±0.03% of calibrated span ±1 count.
Display: Red LED, Dual-line 6-digit display, 0.60 in and 0.46 in.
Transmitter / Flowmeter Power: 85-265 VAC models: 200 mA @ 24 VDC; 12-24 VDC models: 100 mA @ 24 VDC; Second supply with 4-20 mA output models: 40 mA @ 24 VDC.
Power Requirements: 85-265 VAC 50/60 Hz, 90-265 VDC, 20 W max or 12-24 VDC ±10%, 15 W max.
Temperature Limits: Operating: -40 to 149°F (-40 to 65°C); Storage: -40 to 185°F (-40 to 85°C).
Front Panel: NEMA 4X, IP65 front.
Output Signal (option): Isolated 4-20 mA.
Switch Rating (option): 2 or 4 SPDT (Form C) internal and/or 4 SPST (Form A) external; rated 3 A @ 30 VDC and 125/250 VAC resistive load; 1/14 HP @ 125/250 VAC for inductive loads.
Time Delay: 0 to 999.9 s, on and off relay time delays; programmable and independent for each relay.
Shipping Weight: 9.5 oz (269 g).
Agency Approvals: CE, UL.
Programming Software: Free, USB based. Resident on meter, nothing to download.

FREE USB PROGRAMMING SOFTWARE AND CABLE

The PM Series meters come preloaded with free programming software that connects and installs directly to your PC with a standard USB cable, also provided free with each instrument. This eliminates the need to insert CDs, install drivers, or download software from the internet. The software will allow you to configure, monitor, and datalog a PM Series meter using your PC. Just simply connect the meter to your PC with the USB cable and within seconds you will be programming it.

UNIQUE LEVEL MONITORING CAPABILITIES

The MPM meter is particularly well suited for level monitoring, controlling and alarming applications. For instance, the meter can be programmed to display any two of these parameters on its dual line display: height, volume or percent full. Its six digit display allows it to display volumes up to 999,999 gallons, liters, or any other volume. The meter also has a Round Horizontal Tank function which requires the user to enter only the height and length of a round horizontal tank and the meter will display in volume. Up to four relays are available for alarm and control applications, and the relays can even be programmed to alternate for pump control applications.

MODEL CHART

Model	Model	Model	Power	Output 1	Output 2
APM-100	**MPM-100**	**PPM-100**	85-265 VAC	None	None
APM-101	**MPM-101**	**PPM-101**	85-265 VAC	None	4-20 mA
APM-120	**MPM-120**	**PPM-120**	85-265 VAC	2 relays	None
APM-121	**MPM-121**	**PPM-121**	85-265 VAC	2 relays	4-20 mA
APM-140	**MPM-140**	**PPM-140**	85-265 VAC	4 relays	None
APM-141	**MPM-141**	**PPM-141**	85-265 VAC	4 relays	4-20 mA
APM-200	**MPM-200**	**PPM-200**	12-24 VDC	None	None
APM-201	**MPM-201**	**PPM-201**	12-24 VDC	None	4-20 mA
APM-220	**MPM-220**	**PPM-220**	12-24 VDC	2 relays	None
APM-221	**MPM-221**	**PPM-221**	12-24 VDC	2 relays	4-20 mA
APM-240	**MPM-240**	**PPM-240**	12-24 VDC	4 relays	None
APM-241	**MPM-241**	**PPM-241**	12-24 VDC	4 relays	4-20 mA

ACCESSORIES

Model	Description
PMA-01	RS-232 serial adapter
PMA-03	RS-422/485 serial adapter
PMA-04	RS-232 to RS-422/485 isolated converter
PMA-05	RS-232 to RS-422/485 non-isolated converter
PMA-06	USB to RS-232 non-isolated converter
PMA-07	USB to RS-422/485 isolated converter
PMA-08	USB to RS-422/485 non-isolated converter
PMA-09	Snubber
PMA-10	DIN rail mounting kit for two modules
PMA-11	4 relay expansion module
PMA-12	4 digital inputs and 4 digital outputs module